VENT
2

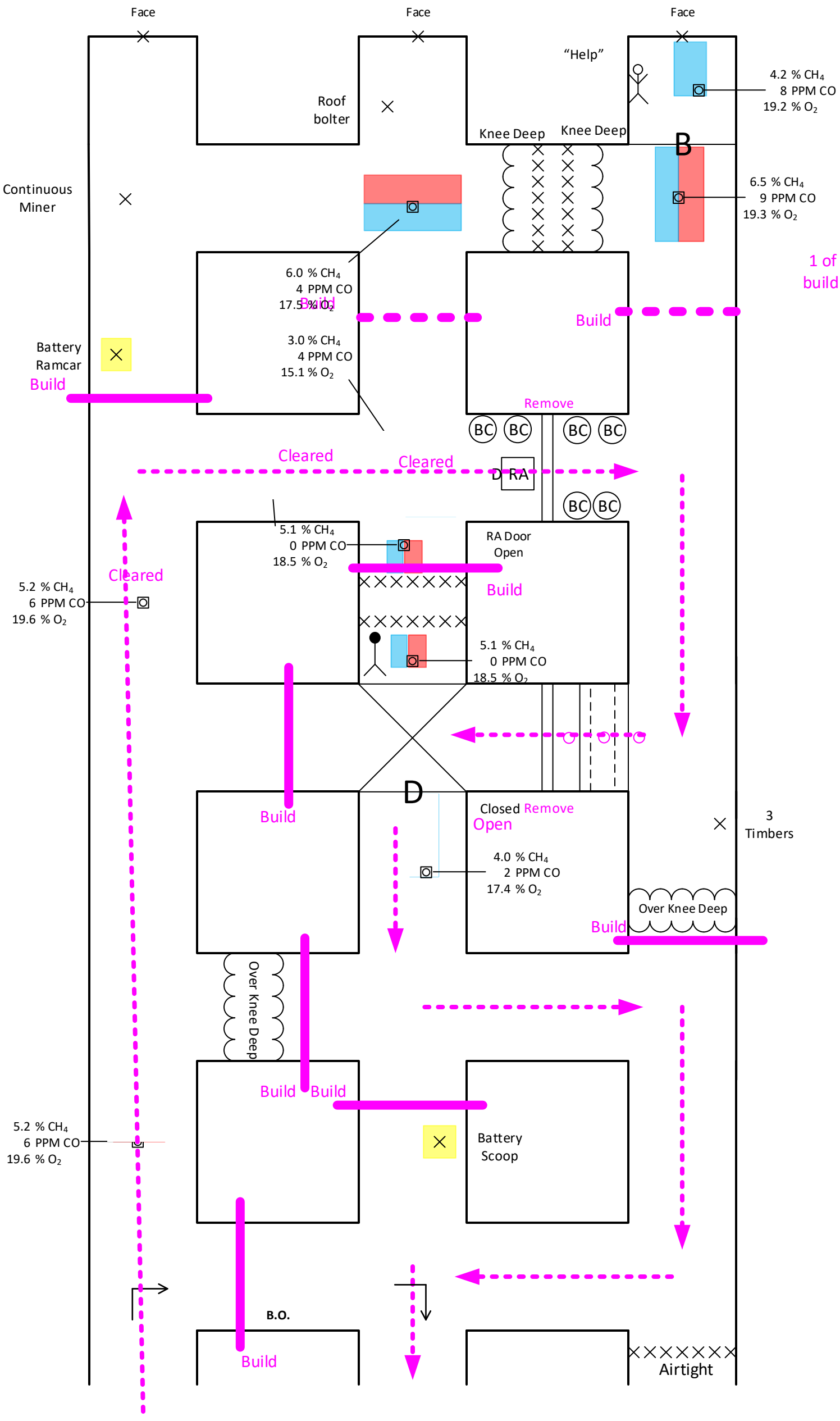
Face
Face
Face
"Help"
4.2 % CH_4
8 PPM CO
19.2 % O_2
Roof
bolter
Knee Deep
Knee Deep
B
Continuous
Miner
6.5 % CH_4
9 PPM CO
19.3 % O_2
1 of 2 dashed
builds required
6.0 % CH_4
4 PPM CO
17.5 % O_2
Build
Build
Battery
Ramcar
Build
3.0 % CH_4
4 PPM CO
15.1 % O_2
Remove
BC
BC
BC
BC
Cleared
Cleared
D
RA
BC
BC
5.1 % CH_4
0 PPM CO
18.5 % O_2
RA Door
Open
Cleared
5.2 % CH_4
6 PPM CO
19.6 % O_2
Build
5.1 % CH_4
0 PPM CO
18.5 % O_2
D
Build
Closed Remove
Open
3
Timbers
4.0 % CH_4
2 PPM CO
17.4 % O_2
Over Knee Deep
Build
Over Knee Deep
Build
Build
5.2 % CH_4
6 PPM CO
19.6 % O_2
Battery
Scoop
B.O.
Build
Airtight